96-Port 3x32 Plug System 5 VDSL2 MDF POTS Splitter Install Guide SA-2811-P132, SA-2811-P332

Item	Qty	Description
1	1	2811 Mount Plate
2	4	8-32 x 1/2 Phil Pan Head Screw
3	4	8-32 Nut
4	4	#8 Split Washer

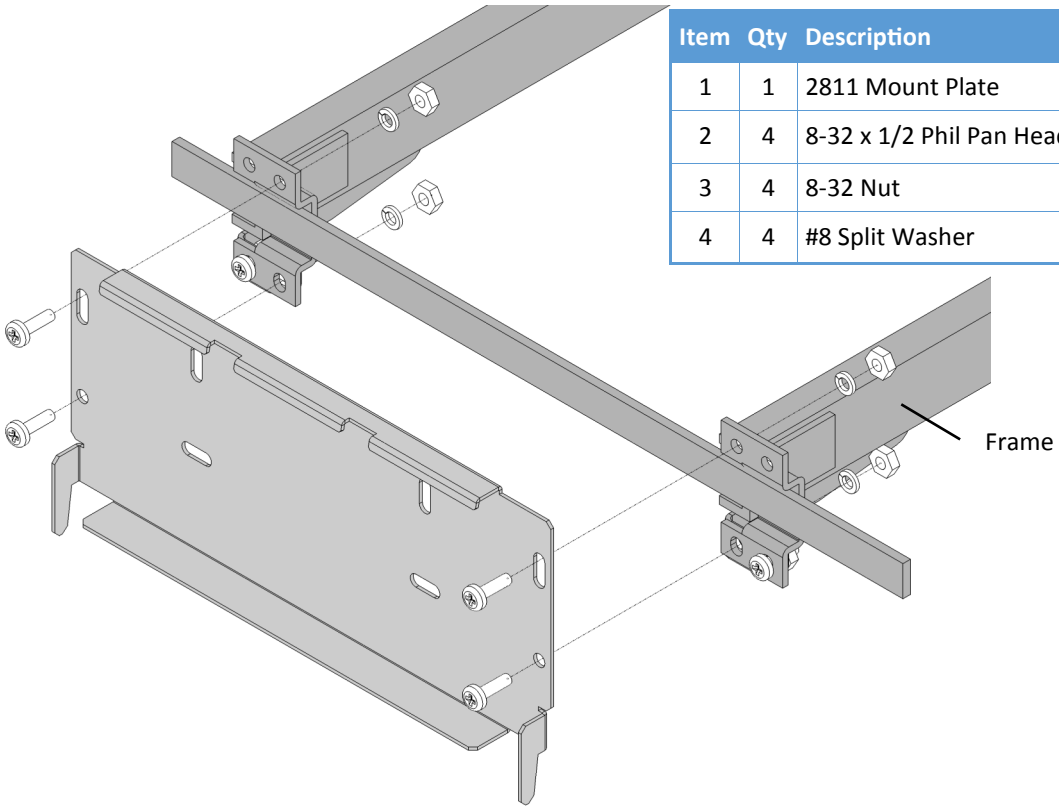

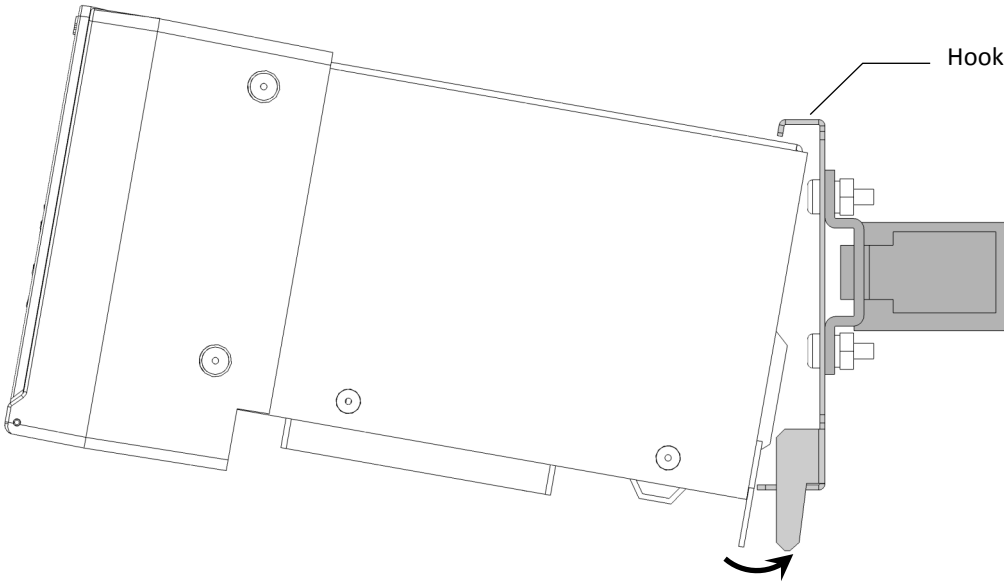

NOTE: 2811 MUST BE INSTALLED IN RESTRICTED ACCESS LOCATION

96-Port 3x32 Plug System 5 VDSL2 MDF POTS Splitter Install Guide SA-2811-P132, SA-2811-P332

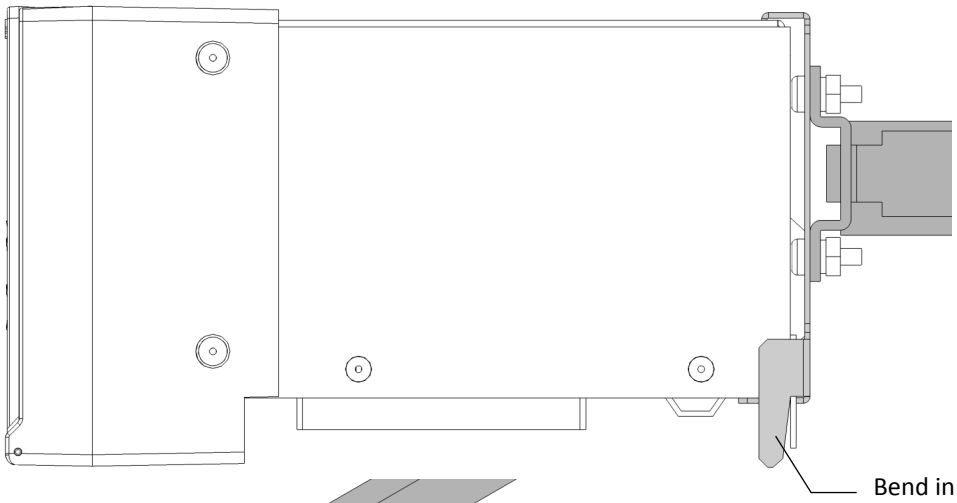

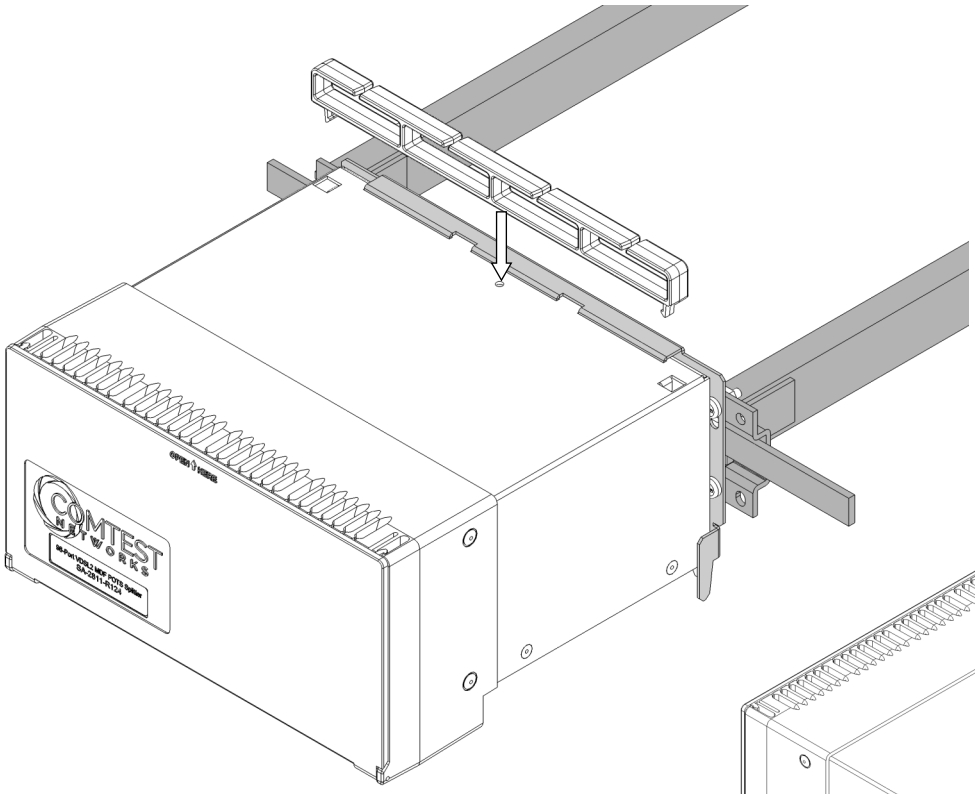

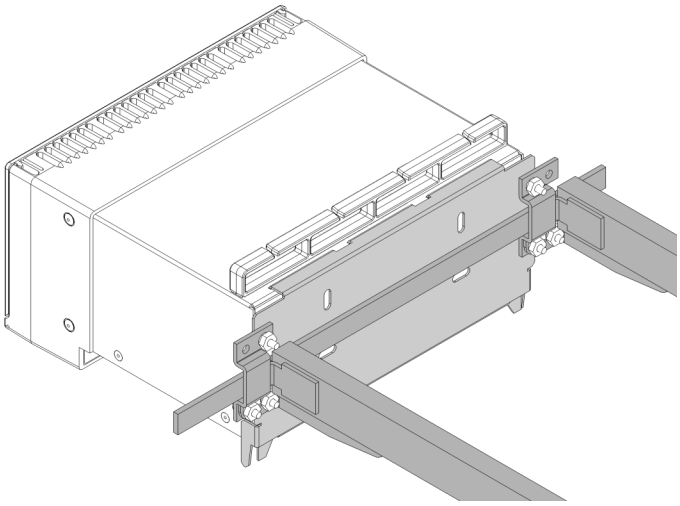

96-Port 3x32 Plug System 5 VDSL2 MDF POTS Splitter Install Guide
SA-2811-P132, SA-2811-P332

WIRE WRAP TO RJ21 PATH

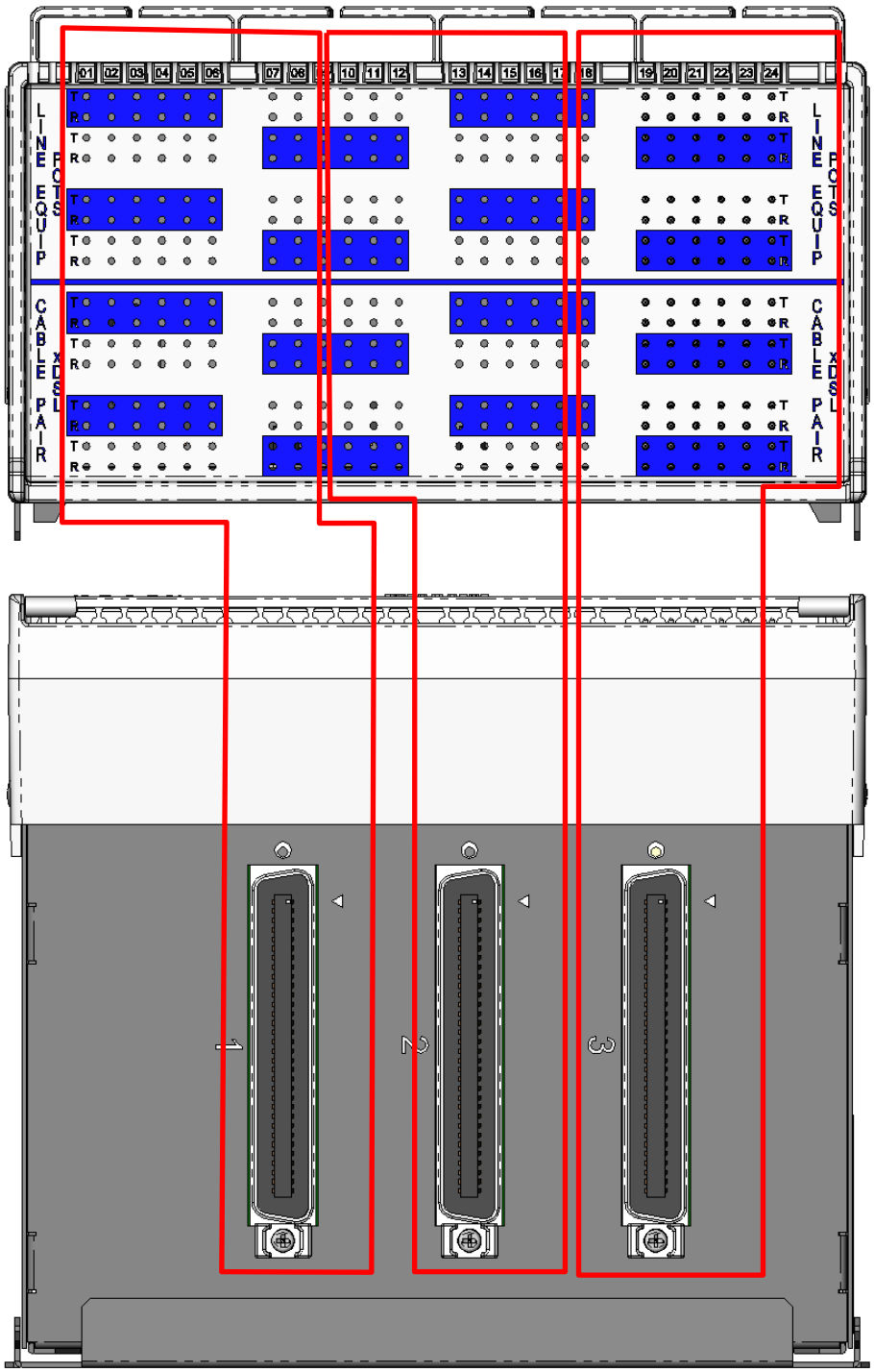

96-Port 3x32 Plug System 5 VDSL2 MDF POTS Splitter Install Guide
SA-2811-P132, SA-2811-P332

WIRE WRAP PANEL

		SHELF #				CARD#																																					
LINE EQUIP POTS	T	4	8	12	16	20	24	28	32	4	8	12	16	20	24	28	32	4	8	12	16	20	24	28	32	T
	R	4	8	12	16	20	24	28	32	4	8	12	16	20	24	28	32	4	8	12	16	20	24	28	32	R
	T	3	7	11	15	19	23	27	31	3	7	11	15	19	23	27	31	3	7	11	15	19	23	27	31	T
	R	3	7	11	15	19	23	27	31	3	7	11	15	19	23	27	31	3	7	11	15	19	23	27	31	R
	T	2	6	10	14	18	22	26	30	2	6	10	14	18	22	26	30	2	6	10	14	18	22	26	30	T
	R	2	6	10	14	18	22	26	30	2	6	10	14	18	22	26	30	2	6	10	14	18	22	26	30	R
	T	1	5	9	13	17	21	25	29	1	5	9	13	17	21	25	29	1	5	9	13	17	21	25	29	T
	R	1	5	9	13	17	21	25	29	1	5	9	13	17	21	25	29	1	5	9	13	17	21	25	29	R
CABLE PAIR xDSL	T	4	8	12	16	20	24	28	32	4	8	12	16	20	24	28	32	4	8	12	16	20	24	28	32	T
	R	4	8	12	16	20	24	28	32	4	8	12	16	20	24	28	32	4	8	12	16	20	24	28	32	R
	T	3	7	11	15	19	23	27	31	3	7	11	15	19	23	27	31	3	7	11	15	19	23	27	31	T
	R	3	7	11	15	19	23	27	31	3	7	11	15	19	23	27	31	3	7	11	15	19	23	27	31	R
	T	2	6	10	14	18	22	26	30	2	6	10	14	18	22	26	30	2	6	10	14	18	22	26	30	T
	R	2	6	10	14	18	22	26	30	2	6	10	14	18	22	26	30	2	6	10	14	18	22	26	30	R
	T	1	5	9	13	17	21	25	29	1	5	9	13	17	21	25	29	1	5	9	13	17	21	25	29	T
	R	1	5	9	13	17	21	25	29	1	5	9	13	17	21	25	29	1	5	9	13	17	21	25	29	R
		Connector #1								Connector #2								Connector #3								

NOTE: ONLY 26 AWG TO 22 AWG TELECOM WIRE TO BE USED

DSL RJ System 5 - PIN OUT

RJ PORT	SIGNAL	RJ PIN
1	RING	1
	TIP	2
2	RING	3
	TIP	4
3	RING	5
	TIP	6
4	RING	7
	TIP	8
5	RING	9
	TIP	10
6	RING	11
	TIP	12
7	RING	13
	TIP	14
8	RING	15
	TIP	16
9	RING	17
	TIP	18
10	RING	19
	TIP	20
11	RING	21
	TIP	22
12	RING	23
	TIP	24

RJ PORT	SIGNAL	RJ PIN
13	RING	25
	TIP	26
14	RING	27
	TIP	28
15	RING	29
	TIP	30
16	RING	31
	TIP	32
17	RING	33
	TIP	34
18	RING	35
	TIP	36
19	RING	37
	TIP	38
20	RING	39
	TIP	40
21	RING	41
	TIP	42
22	RING	43
	TIP	44
23	RING	45
	TIP	46
24	RING	47
	TIP	48

RJ PORT	SIGNAL	RJ PIN
25	RING	49
	TIP	50
26	RING	51
	TIP	52
27	RING	53
	TIP	54
28	RING	55
	TIP	56
29	RING	57
	TIP	58
30	RING	59
	TIP	60
31	RING	61
	TIP	62
32	RING	63
	TIP	64